RADEX®-NC High-Torque DK and EK
Servo lamina couplings

Double- and single-cardanic types

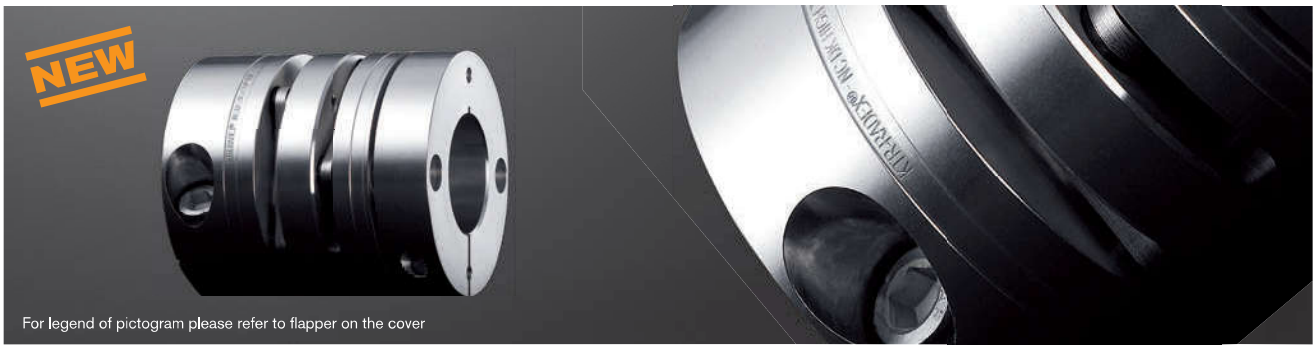

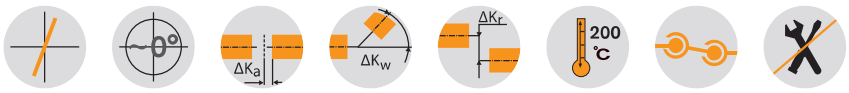

Hub design 2.5/2.6

Type DK

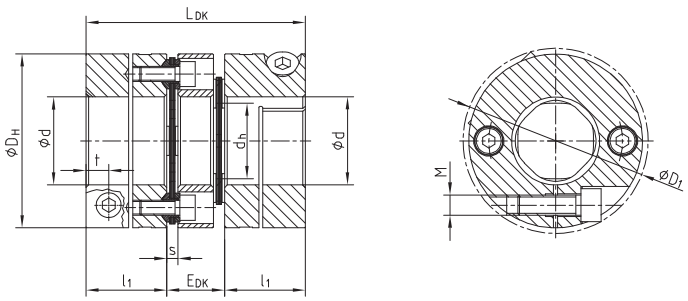

Type EK

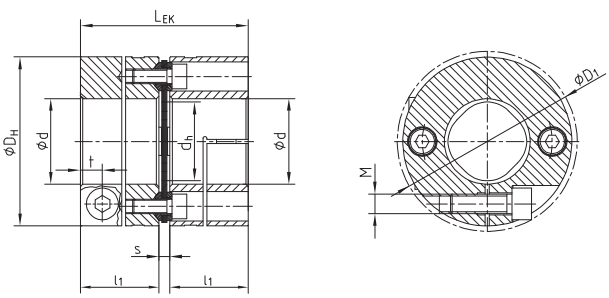

RADEX®-NC HT Types DK and EK - Hub and spacer material aluminium/laminas stainless steel														
Size	Dimensions [mm]										Clamping screw		Mass moments of inertia	
	Max. d1, d2	D_H	D_1	l_1, l_2	L_{DK}	E_{DK}	L_{EK}	d_h	s	t	M	T_A [Nm]	DK [kgm²]	EK [kgm²]
16	20	46	48.9	22	58	14	47	19.5	3	6.8	M6	10	0.000063	0.00005
21	30	58	59.2	25	69	19	53.5	24	3.5	6.8	M6	10	0.00018	0.00014
26	38	69	73.4	32	88	24	69	30	5	9	M8	25	0.00046	0.00036
36	45	84	86.8	35	93.6	23.6	74.8	48	4.8	10.5	M10	49	0.0011	0.00091

Technical data												
Size	T_{KN} [1] [Nm]	$T_{K\,max}$ [1] [Nm]	Max. speed [rpm]	Torsion spring stiffness [Nm/rad]		Lamina shape	Displacements of type DK			Displacements of type EK		
				Type EK	Type DK		Radial [mm]	Axial [mm]	Angular each lamina [degree]	Radial [mm]	Axial [mm]	Angular each lamina [degree]
16	35	53	10,500	20,000	10,000	4 holes	0.16	1.00	1	—	0.50	1
21	70	105	8,500	40,000	20,000	4 holes	0.25	1.20	1	—	0.60	1
26	120	180	7,000	63,000	31,500	4 holes	0.30	1.60	1	—	0.80	1
36	340	510	5,700	250,000	125,000	6 holes	0.40	2.00	1	—	1.00	1

[1] For selection see page 22 et seqq.

Review of shaft-hub-connection: Friction torques T_R [Nm] for hub design 2.5																		
Size	Pilot bored	Ø10	Ø12	Ø14	Ø15	Ø16	Ø19	Ø20	Ø24	Ø25	Ø28	Ø30	Ø32	Ø35	Ø38	Ø40	Ø42	Ø45
16	5.5	28	30	31	32	32	34	35										
21	7.5		36	37	38	38	41	41	44	45	47	48						
26	9.5				82	83	87	88	93	94	98	100	103	106	110			
36	11.5						156	158	166	168	174	178	181	187	193	197	200	206

Types of hubs

Type 2.5 clamping hub
double slot without feather keyway

Type 2.6 clamping hub
double slot with feather keyway

Ordering example:

RADEX®-NC 21 HT	DK	2.5 - Ø20		2.5 - Ø25	
Coupling size	Type	Hub design	Finish bore	Hub design	Finish bore

RADEX®-NC High-Torque DK and EK
Servo lamina couplings

Double- and single-cardanic types

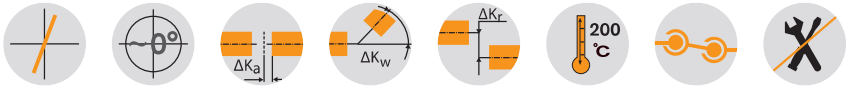

Hub design 3.5/3.6

Type DK

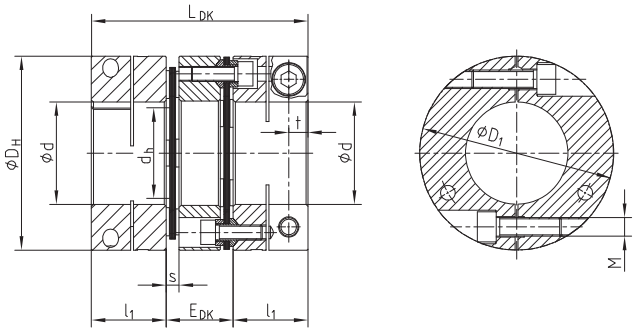

Type EK

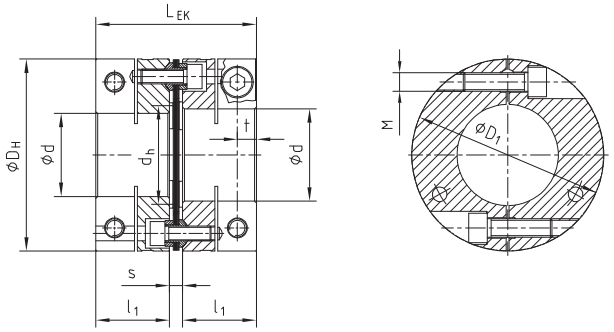

RADEX®-NC HT Types DK and EK - Hub and spacer material aluminium/laminas stainless steel														
Size	Dimensions [mm]										Clamping screw		Mass moments of inertia	
	Max. d1, d2	D_H	D_1	l_1, l_2	L_{DK}	E_{DK}	L_{EK}	d_h	s	t	M	T_A [Nm]	DK [kgm²]	EK [kgm²]
43	55	104	104	40.5	115	34	89	61	8	10.5	M10	49	0.0033	0.0025
51	70	124	126.2	50	138	38	108	73	8	14	M14	135	0.0082	0.006
61	80	144	148.5	54	150	42	118	88	10	16	M16	210	0.016	0.012

Technical data												
Size	T_{KN} [1] [Nm]	$T_{K\,max}$ [1] [Nm]	Max. speed [rpm]	Torsion spring stiffness [Nm/rad]		Lamina shape	Displacements of type DK			Displacements of type EK		
				Type EK	Type DK		Radial [mm]	Axial [mm]	Angular each lamina [degree]	Radial [mm]	Axial [mm]	Angular each lamina [degree]
43	600	900	8,100	310,000	155,000	6 holes	0.50	2.20	1	—	1.10	1
51	1,300	1,950	6,700	1,200,000	600,000	6 holes	0.60	2.50	1	—	1.25	1
61	2,000	3,000	6,100	1,550,000	775,000	6 holes	0.73	2.60	1	—	1.30	1

[1] For selection see page 22 et seqq.

Review of shaft-hub-connection: Friction torques T_R [Nm] for hub design 3.5																				
Size	Pilot bored	Ø24	Ø25	Ø28	Ø30	Ø32	Ø35	Ø38	Ø40	Ø42	Ø45	Ø48	Ø50	Ø55	Ø58	Ø60	Ø65	Ø70	Ø75	Ø80
43	15.0	149	155	174	186	198	217	235	248	260	279	297	310	341						
51	28.0		226	253	271	290	317	344	362	380	407	434	452	498	525	543	588	633		
61	30.0										557	594	619	680	717	742	804	866	928	990

Types of hubs

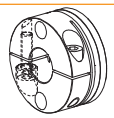

Type 3.5 clamping hub
triple slotted, without feather keyway

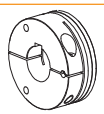

Type 3.6 clamping hub
triple slotted, with feather keyway

Ordering example:

RADEX®-NC 43 HT	DK	3.5 - Ø25		3.5 - Ø35	
Coupling size	Type	Hub design	Finish bore	Hub design	Finish bore

RADEX®-NC High-Torque DK and EK
Servo lamina couplings

Double- and single-cardanic types

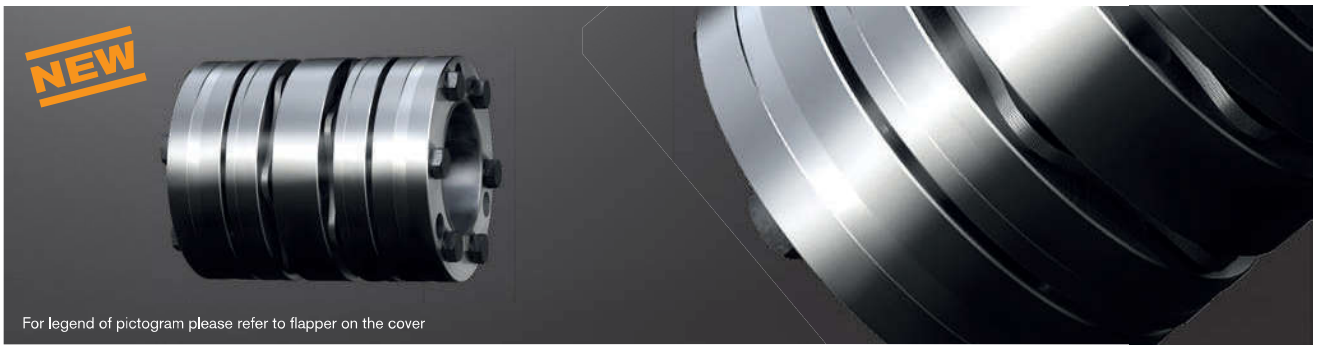

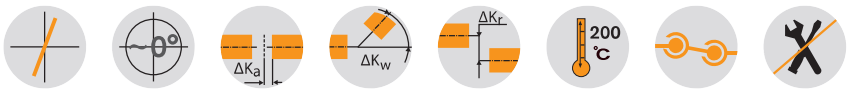

RADEX®-NC HT Types DK and EK - Hub and spacer material aluminium/laminas stainless steel														
Size	Dimensions [mm]										Clamping screw		Mass moments of inertia	
	Max. d1, d2	D_H	l_1, l_2	L_{DK}	L_{DK1}	E_{DK}	L_{EK}	L_{EK1}	d_h	s	M	T_A [Nm]	DK [kgm²]	EK [kgm²]
16	20	46	24	62	68	14	51	57	19.5	3	M5	6	0.000122	0.000110
21	28	58	28	75	81.2	19	59.5	65.7	24	3.5	M6	10	0.000353	0.000312
26	35	69	36	96	100.8	24	77	81.8	30	5	M8	25	0.000850	0.000747
36	42	84	43	109.6	118.3	23.6	90.8	99.5	48	4.8	M8	25	0.022000	0.002000
43	60	104	46	126	135.9	34	100	109.9	61	8	M8	25	0.005906	0.005133
51	70	124	50	138	150.1	38	108	120.1	73	8	M10	49	0.013597	0.011873
61	80	144	55	152	165.5	42	120	133.5	88	10	M12	85	0.027853	0.024340

Technical data												
Size	T_{KN} [1] [Nm]	$T_{K\,max}$ [1] [Nm]	Max. speed [rpm]	Torsion spring stiffness [Nm/rad]		Lamina shape	Displacements of type DK			Displacements of type EK		
				Type EK	Type DK		Radial [mm]	Axial [mm]	Angular each lamina [degree]	Radial [mm]	Axial [mm]	Angular each lamina [degree]
16	35	53	31,150	20,000	10,000	4 holes	0.16	1.00	1.00	—	0.50	1
21	70	105	24,700	40,000	20,000	4 holes	0.25	1.20	1.00	—	0.60	1
26	120	180	20,800	63,000	31,500	4 holes	0.30	1.60	1.00	—	0.80	1
36	340	510	17,100	250,000	125,000	6 holes	0.40	2.00	1.00	—	1.00	1
43	600	900	13,800	310,000	155,000	6 holes	0.50	2.20	1.00	—	1.10	1
51	1300	1950	11,600	1,200,000	600,000	6 holes	0.60	2.50	1.00	—	1.25	1
61	2000	3000	10,000	1,550,000	775,000	6 holes	0.73	2.60	1.00	—	1.30	1

[1] For selection see page 22 et seqq.

Review of shaft-hub-connection: Friction torques T_R [Nm] for hub design 6.5																							
Size	Tolerance fit	Ø10	Ø12	Ø15	Ø16	Ø19	Ø20	Ø25	Ø28	Ø30	Ø32	Ø35	Ø38	Ø40	Ø42	Ø45	Ø50	Ø55	Ø60	Ø65	Ø70	Ø75	Ø80
16	H7/h6	29	33	70	50	83	97																
	H7/k6	34	42	76	62	96	109																
21	H7/h6	27	45	91	79	125	145	144	201														
	H7/k6	36	56	99	93	139	157	187	245														
26	H7/h6			104	126	194	169	311	338	404	273	357											
	H7/k6			124	145	214	200	334	382	444	355	441											
36	H7/h6						241	438	521	616	523	664	647	741	841								
	H7/k6						284	471	558	646	640	779	778	875	974								
43	H7/h6								543	705	647	814	946	1073	980	1163	1200	1171	1471				
	H7/k6								634	789	784	916	1096	1219	1144	1332	1376	1380	1679				
51	H7/h6									750	818	1020	1085	1228	1166	1377	1450	1725	2318	2364	2792		
	H7/k6									822	927	1117	1254	1392	1348	1568	1652	1972	2391	2451	2845		
61	H7/h6											880	1074	1211	1264	1480	1750	1952	2145	2573	2707	2764	3196
	H7/k6											951	1131	1258	1333	1534	1810	2036	2244	2638	2788	2860	3254

Ordering example:	RADEX®-NC 26 HT	DK	6.5 - Ø24		6.5 - Ø35	
	Coupling size	Type	Hub design	Finish bore	Hub design	Finish bore

Hub design 6.5

Type DK

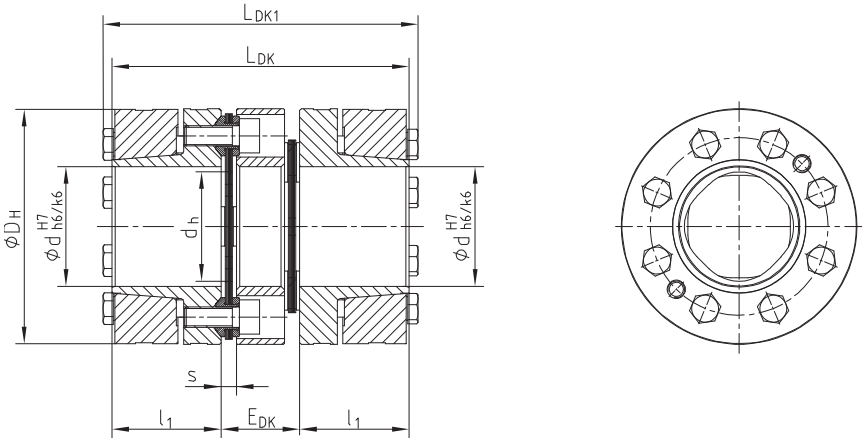

Type EK

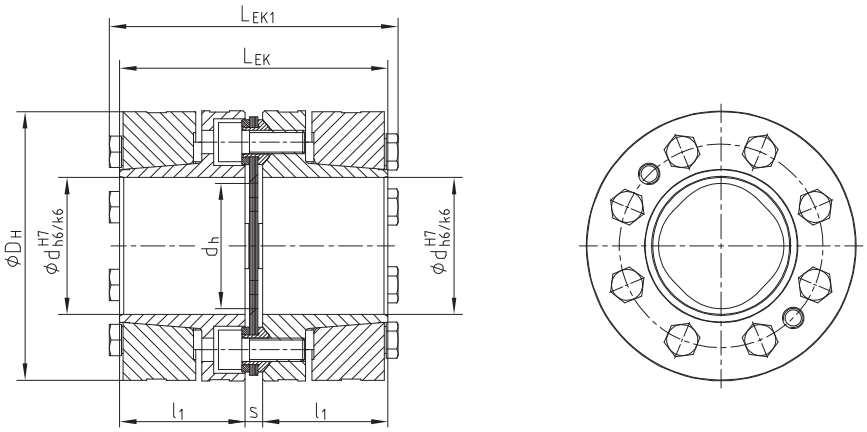

Types of hubs

Type 6.5
Clamping ring hub