KTR-SI Compact
Backlash-free overload systems

With backlash-free ROTEX® GS

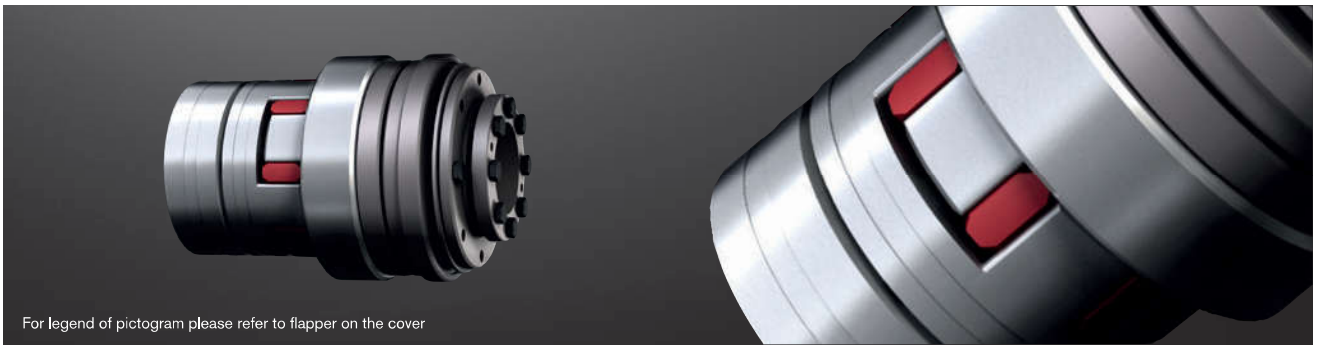

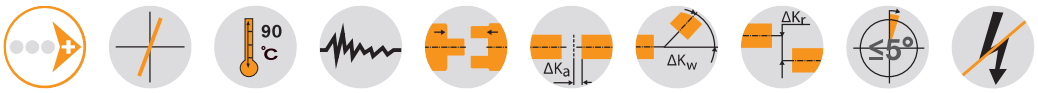

Hub design 1.0 Hub design 1.0

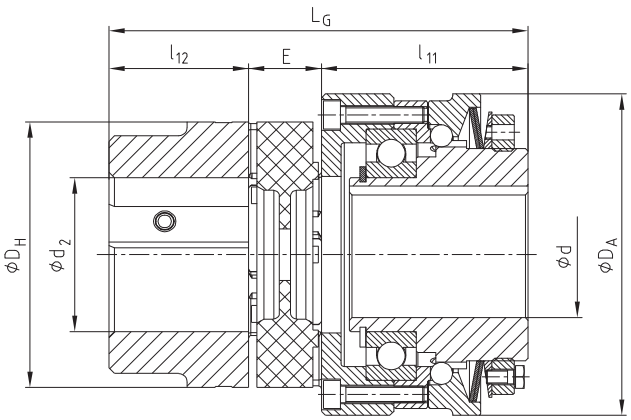

Hub design 6.0 Hub design 4.5

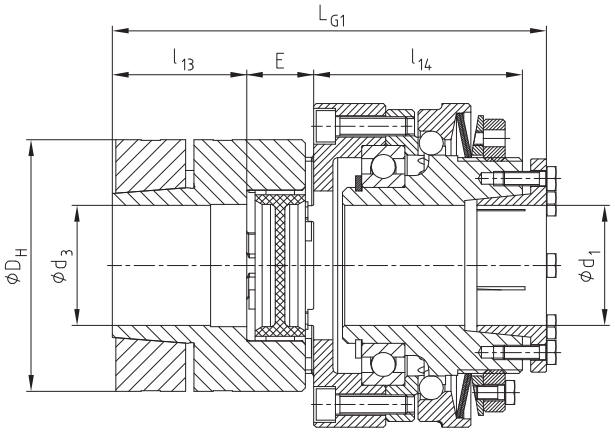

Technical data – dimensions																		
Size	Max. speed [1] [rpm]	Torques [Nm]			ROTEX® GS size [2]	Max. bore				Dimensions [mm]								
		T1	T2	T3		d	d_1	d_2	d_3	D_H	D_A	l_{11}	l_{12}	l_{13}	l_{14}	E	L_G	L_{G1}
01	4000	3-14	6-28	13-56	24	20	25	28	28	55	70	47	30	30	47	18	95	102
0	3000	9-35	18-70	40-140	28	25	30	38	38	65	85	56.5	35	35	54.5	20	111.5	119.5
1	2500	19-65	38-130	78-260	38	30	40	45	45	80	100	69	45	45	67	24	138	146
2	2000	35-110	80-220	160-440	42	40 (45) [3]	50	55	55	95	115	74	50	50	73	26	150	159
3	1200	80-210	160-400	320-800	48	50	60	62	62	105	135	87	56	56	87	28	171	182
4	400	230-730	460-1590	960-3100	75	75	80	80	80	160	220	158.5	85	85	139.5	40	283.5	302.5

[1] See comments on page 245
[2] See selection of ROTEX® GS couplings on page 22 et seqq.
[3] The figure in brackets specifies the max. bore with keyway to DIN 6885 sheet 3 (low-rise design)

Ordering example:

KTR-SI Compact 1	DK	T2	4.5	d_1 Ø25	6.0 / d_3 Ø25	150 Nm
Type/size	Type (DK/SK)	Disk spring	KTR-SI hub design	KTR-SI bore	ROTEX® GS hub design/bore	Torque set